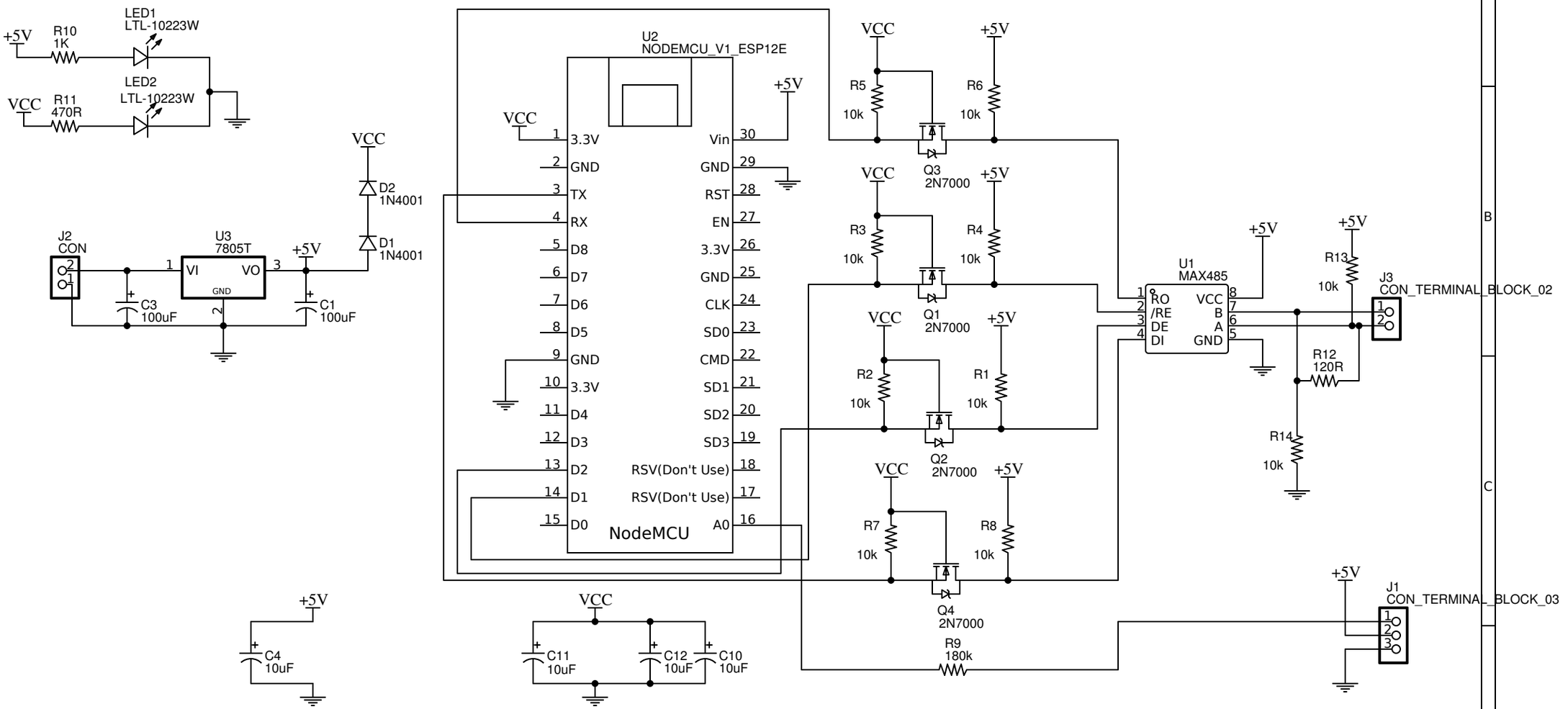

TITLE: New Schematic	REV: 1.0
Date: 2018-11-11	Sheet: 1/1
EasyEDA V5.8.20	Drawn By: aurangzebhaque